Needle Valve (Straight Body, Soft Seat) NVA

Description & Features:

- Excellent flow regulation and leak tight
- The one-piece body construction (no welding) provides strength, safety and corrosion resistance
- “Slow opening” prevents sudden pressure surge and instrument damage
- Materials include carbon steel and stainless steel
- Available in Soft Seat (6,000 psi, Delrin seat)
- ASME B1.20.1 compliant
- CRN registered
- 5 year warranty

Applications:

- Ideally suited for severe duty oil and gas installations including refineries and processing plants, water treatment plants, power plants and hydraulic applications

Order Codes (products in bold are normally stock in North America)

NPT Connection	Material	Code
1/4” Female x 1/4” Female	Carbon Steel	**NVA4020**
1/4” Male x 1/4” Female		**NVA4000**
3/8” Female x 3/8” Female		NVA4024
3/8” Male x 3/8” Female		NVA4004
1/2” Female x 1/2” Female		**NVA4021**
1/2” Male x 1/2” Female		**NVA4001**
3/4” Female x 1/2” Female		NVA4022
3/4” Male x 1/2” Female		NVA4002
3/4” Female x 3/4” Female		NVA4025
3/4” Male x 3/4” Female		NVA4005
1” Female x 1” Female		NVA4023
1” Male x 1” Female		NVA4003
1/4” Female x 1/4” Female	Stainless Steel	**NVA1020**
1/4” Male x 1/4” Female		**NVA1000**
3/8” Female x 3/8” Female		NVA1024
3/8” Male x 3/8” Female		NVA1004
1/2” Female x 1/2” Female		**NVA1021**
1/2” Male x 1/2” Female		**NVA1001**
3/4” Female x 1/2” Female		NVA1022
3/4” Male x 1/2” Female		NVA1002
3/4” Female x 3/4” Female		NVA1025
3/4” Male x 3/4” Female		NVA1005
1” Female x 1” Female		NVA1023
1” Male x 1” Female		NVA1003

Material

Description	Component Number	Carbon Steel	Stainless Steel
Body	1	Carbon Steel	316 SS
Bonnet	2	Carbon Steel	316 SS
Dustcap	3	Nylon	Nylon
Needle / Needle Tip	4	316 SS	316 SS
Handle	5	Carbon Steel	304 SS
Screw	6	304 SS	304 SS
Fastening Screw	7	304 SS	304 SS
O-ring	8	FKM	FKM
Seat	9	Delrin	Delrin
Slotted Spring Pin	10	304 SS	304 SS

Female x Female

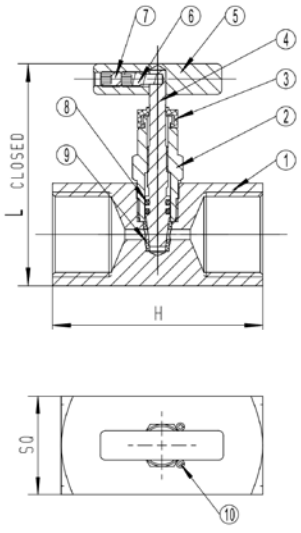

Male x Female

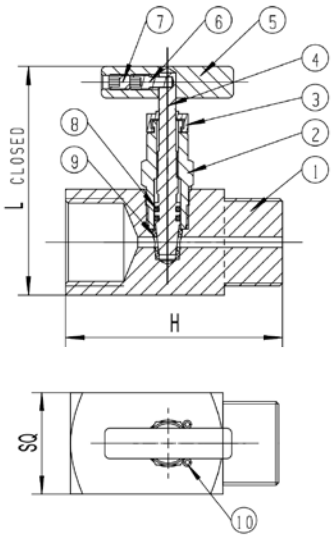

Dimensions

Size	H	L	SQ
1/4” Female x 1/4” Female	2.56” (65mm)	2.65” (67mm)	1.10” (28mm)
1/4” Male x 1/4” Female	2.56” (65mm)	2.65” (67mm)	1.10” (28mm)
3/8” Female x 3/8” Female	2.56” (65mm)	2.65” (67mm)	1.10” (28mm)
3/8” Male x 3/8” Female	2.56” (65mm)	2.65” (67mm)	1.10” (28mm)
1/2” Female x 1/2” Female	2.76” (70mm)	2.65” (67mm)	1.10” (28mm)
1/2” Male x 1/2” Female	2.76” (70mm)	2.65” (67mm)	1.10” (28mm)
3/4” Female x 1/2” Female	2.84” (72mm)	2.80” (71mm)	1.26” (32mm)
3/4” Male x 1/2” Female	2.84” (72mm)	2.65” (67mm)	1.10” (28mm)
3/4” Female x 3/4” Female	2.84” (72mm)	2.80” (71mm)	1.26” (32mm)
3/4” Male x 3/4” Female	2.84” (72mm)	2.80” (71mm)	1.26” (32mm)
1” Female x 1” Female	3.23” (82mm)	3.12” (79mm)	1.58” (40mm)
1” Male x 1” Female	3.23” (82mm)	3.12” (79mm)	1.58” (40mm)

Panel Mont Kit (CPM/SPM)

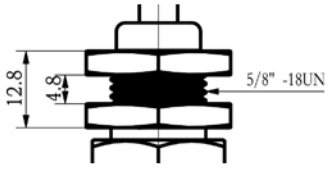

Option suffix:

CPM = Carbon steel panel mount kit SPM = Stainless steel panel mount kit